Data Sheet

Article number: 2310419793
Description: E+G Side mounting top bracket
TLSB-48-SST

Measures

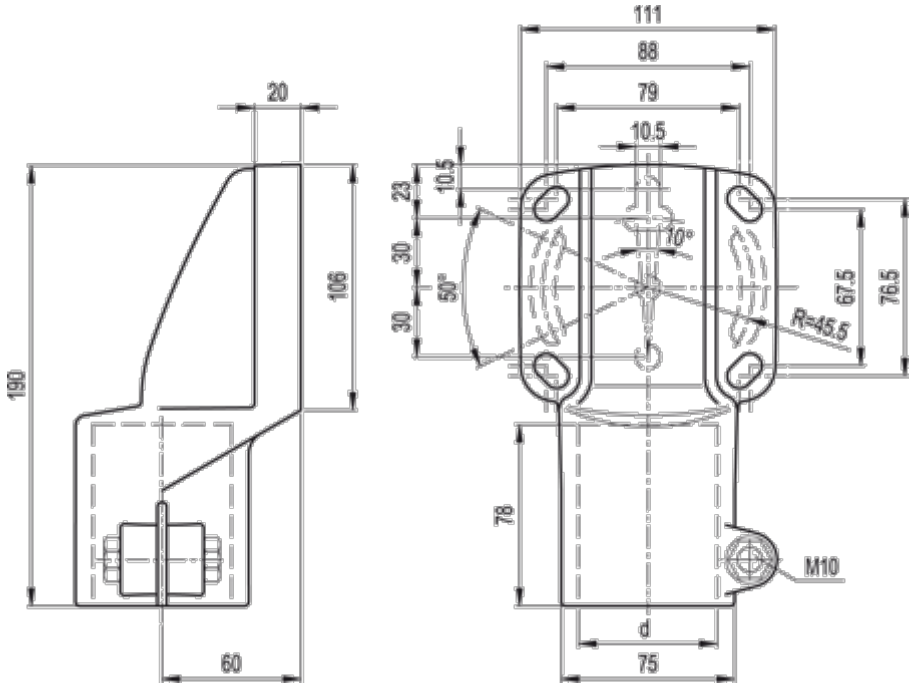

d (inch) = 1 1/2 GAS
d mm = 48,3
Weight (g) = 430

Product drawings and brochures of any kind may contain errors for which Brd. Klee A/S cannot be liable.